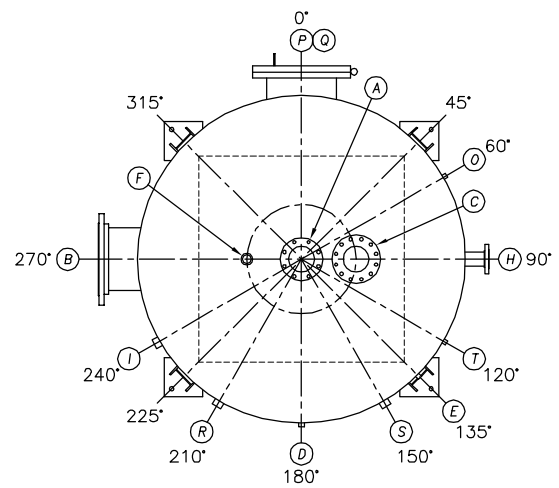

TOP VIEW

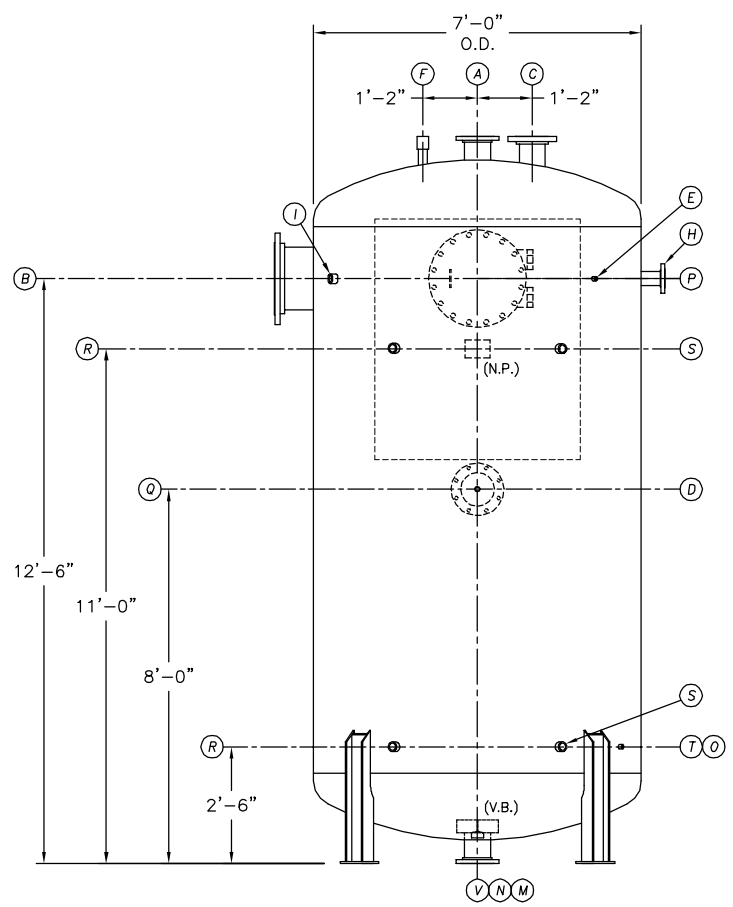

FRONT VIEW

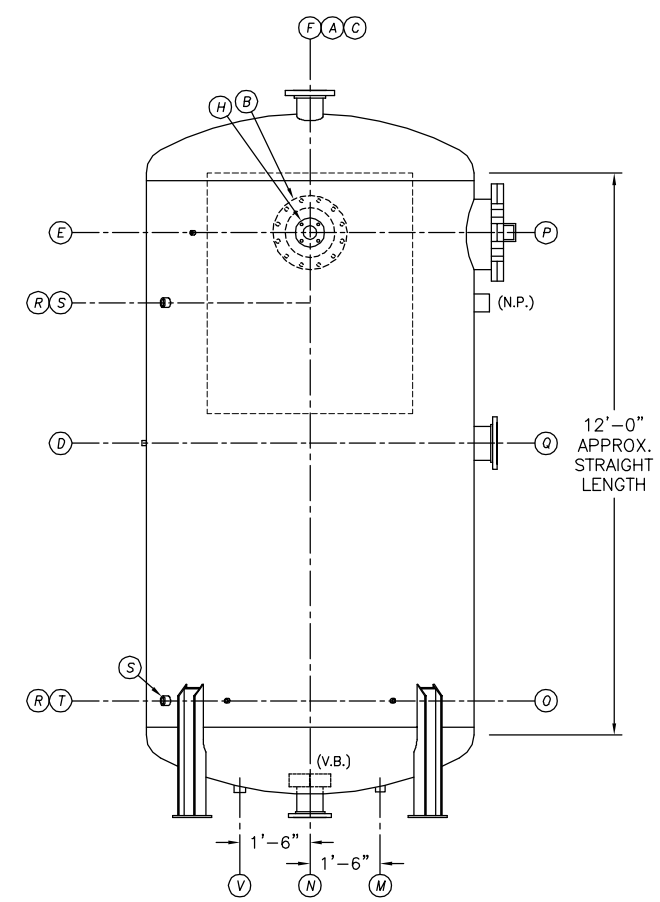

END VIEW

NOTES:

1. SEE CONNECTION SCHEDULE FOR NOZZLE DESCRIPTIONS.
2. STRAIGHT LENGTHS ARE APPROXIMATE. OVERALL LENGTH (OAL) IS TO BE HELD.
3. FOR MISCELLANEOUS DETAILS SEE MD DRAWINGS
4. DIMENSIONS ARE GIVEN FROM CENTER LINE OF TANKS TO NOZZLE CENTER LINE OR OUTSIDE FACE OF FLANGE.
5. G.B. = GRAB BAR; V.B. = VORTEX BREAKER; N.P. = NAME PLATE; F.S. = FAR SIDE; D.S. = DRIP SHIELD; N.S. = NEAR SIDE; T.B. = TEE BAFFLE; ℄ = CENTER LINE

NOTE:

PUMP SUCTION NOZZLES WILL BE ADDED TO MATCH ANY PUMPS SUPPLIED BY KCD

UMENT AND THE INFORMATION IT HAVE BEEN FURNISHED FOR USE R OWN ORGANIZATION ONLY AND URPOSE CONSISTENT WITH THE ON BETWEEN YOUR ORGANIZATION NSAS CITY DEAERATOR COMPANY. OPIES OF OR DATA FROM THIS T SHALL BE FURNISHED TO ANY PARTY WITHOUT THE WRITTEN OF KANSAS CITY DEAERATOR CO., RLAND PARK, KANSAS 66209

NO.	DATE	DESCRIPTION OF CHANGE	BY
–	–	–	–
–	–	–	–
–	–	–	–

CLIENT:

KANSAS CITY DEAERATOR CO.
6731 W. 121st STREET
OVERLAND PARK, KANSAS 66209
(913) 338–2111 FAX (913) 338–2144

JOB #	SCALE	DESIGNED	DRAWN	CHECKED	DATE	UTD
STD	NTS	MK	GENI	PC	1–13 2004	1–13 2004

TITLE: GENERAL ARRANGEMENT

MODEL: VTP246–7012–05

DWG. NO.: VTP246–7012–05

Click Here & Upgrade
Expanded Features
Unlimited Pages
PDF Complete